Flush pull handles with lever latch

Snap-in assembly, technopolymer

RoHS | PA | +176 °F / +32 °F

HANDLE AND STATOR

Glass-fibre reinforced polyamide based (PA) technopolymer, grey-black colour, matte finish.

TWO KEYS

Nckel-plated brass or polyamide based (PA) technopolymer.

STANDARD EXECUTIONS

PR.92-CH	-	D (1)	-	K (2)	-	F (3)

(1) **D**: lock placed on the right.
S: lock placed on the left.

(2) **K**: lock with key removable in two positions, rotation by 90°; brass-plated zinc alloy rotor.
QE: electrical panel lock type; glass-fibre reinforced polyamide-based (PA) technopolymer rotor; AISI 304 stainless steel screw and washer.

(3) *Only for K execution*
F: different combination (400 combinations).
U: same combination (all locks can be opened with the same key).
M: different combination with master-key (160 combinations). Two master-keys, which open all of them, are supplied for every purchase order.

Only for QE execution
T: lock with triangular groove.
Q: lock with square groove.
A: lock with two-wing groove.

Order example for K execution:
51911 PR.92-CH-D-K-F
Order example for QE execution:
51921 PR.92-CH-D-QE-T

ELESA Original design

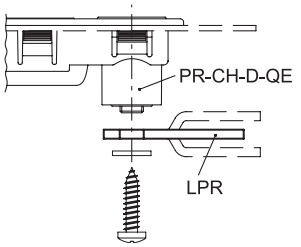

Drilling template

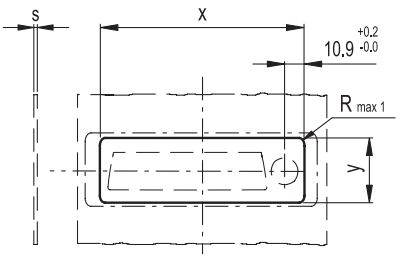

s	x	y
0.7÷1	110 +0.3	30.5 +0.1
1÷1.5	110 +0.3	30.7 +0.1
1.5÷2	110 +0.3	31.7 +0.1
2÷2.2	110 +0.3	31.7 +0.1

TECHNICAL DATA

The lifting (F1) and pull out (F2) resistance values reported in the table are the result of tests carried out in the laboratory with handles assembled on metal sheet panels with thickness = 1.5 mm.

ACCESSORIES ON REQUEST *(TO BE ORDERED SEPARATELY)*

- Closing lever LPR (on page 1062).

ASSEMBLY INSTRUCTIONS

1. Drill the handle housing according to the template dimensions reported in the table.
2. Remove all drilling burrs before fitting the handle.
3. Fit the upper part of the handle into the housing (Fig. 1).
4. Press onto the lower part until the handle is completely snapped in (Fig. 2).

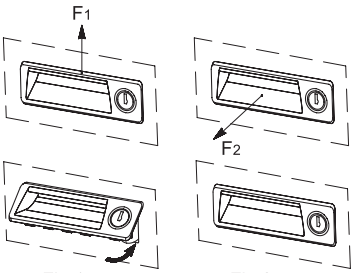

Fig.1 Fig.2

elesa
Models all rights reserved in accordance with the law. Always mention the source when reproducing our drawings and photos.

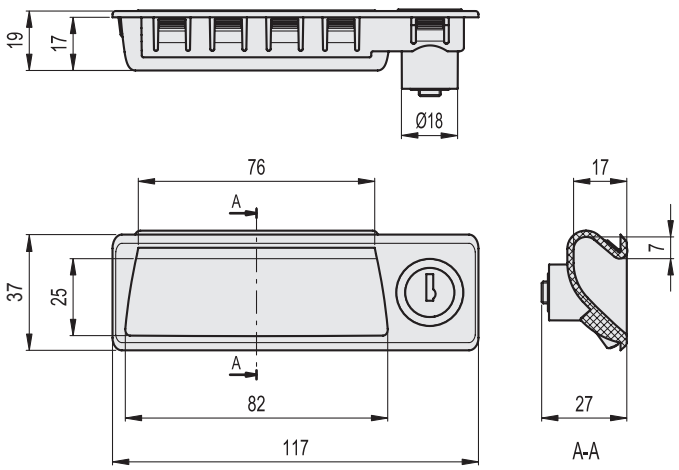

METRIC

Code	Description	F1 [N]	F2 [N]	⚖
51911	PR.92-CH-D-K-F	3600	1500	57
51913	PR.92-CH-D-K-U	3600	1500	57
51915	PR.92-CH-D-K-M	3600	1500	57
51921	PR.92-CH-D-QE-T	3600	1500	40
51923	PR.92-CH-D-QE-Q	3600	1500	40
51925	PR.92-CH-D-QE-A	3600	1500	40
51912	PR.92-CH-S-K-F	3600	1500	57
51914	PR.92-CH-S-K-U	3600	1500	57
51916	PR.92-CH-S-K-M	3600	1500	57
51922	PR.92-CH-S-QE-T	3600	1500	40
51924	PR.92-CH-S-QE-Q	3600	1500	40
51926	PR.92-CH-S-QE-A	3600	1500	40

Models all rights reserved in accordance with the law. Always mention the source when reproducing our drawings and photos.